ZENDER DX-400C

MODEL

SERVICE MANUAL

Doc. Name	1500A-FRONT	ircuit Diagram	Doc. Number	Sheet 01 of 01

ZEHN -00028

DRWN	
DATE	1999-03-04
CHKD	
APRO	
REF	
MAN	
ISSUE	1.3
CONTENT	

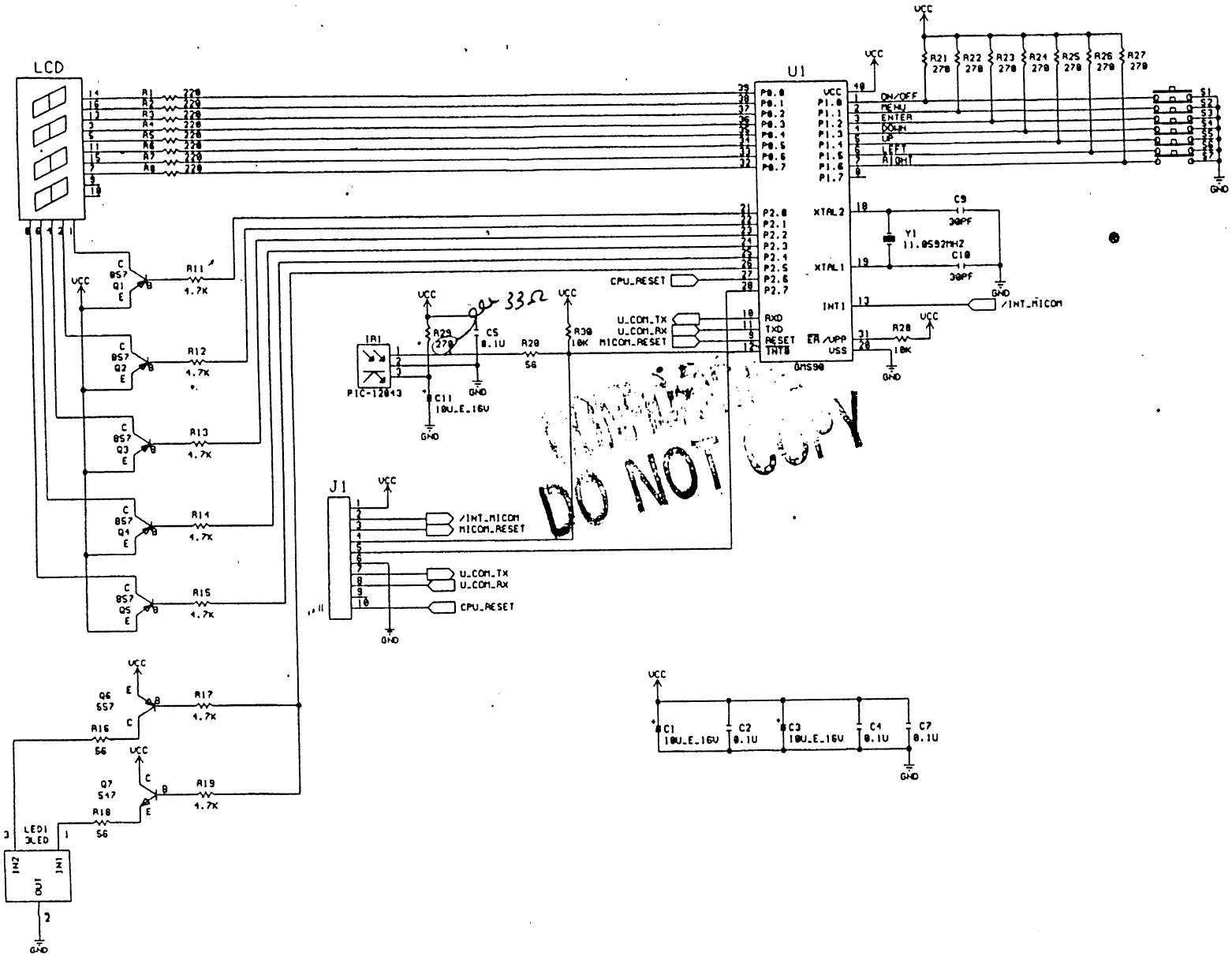

DO NOT COPY

DX400 4

28

Doc. Name	ADT-1530/1530D/15[illegible]/1530DA Circuit Diagram	C. Number		Sheet 01 of 13

DRWN

DATE 1999-03-29

CHKD

APRD

REF

MAN

ISSUE 1.4

CONTENT

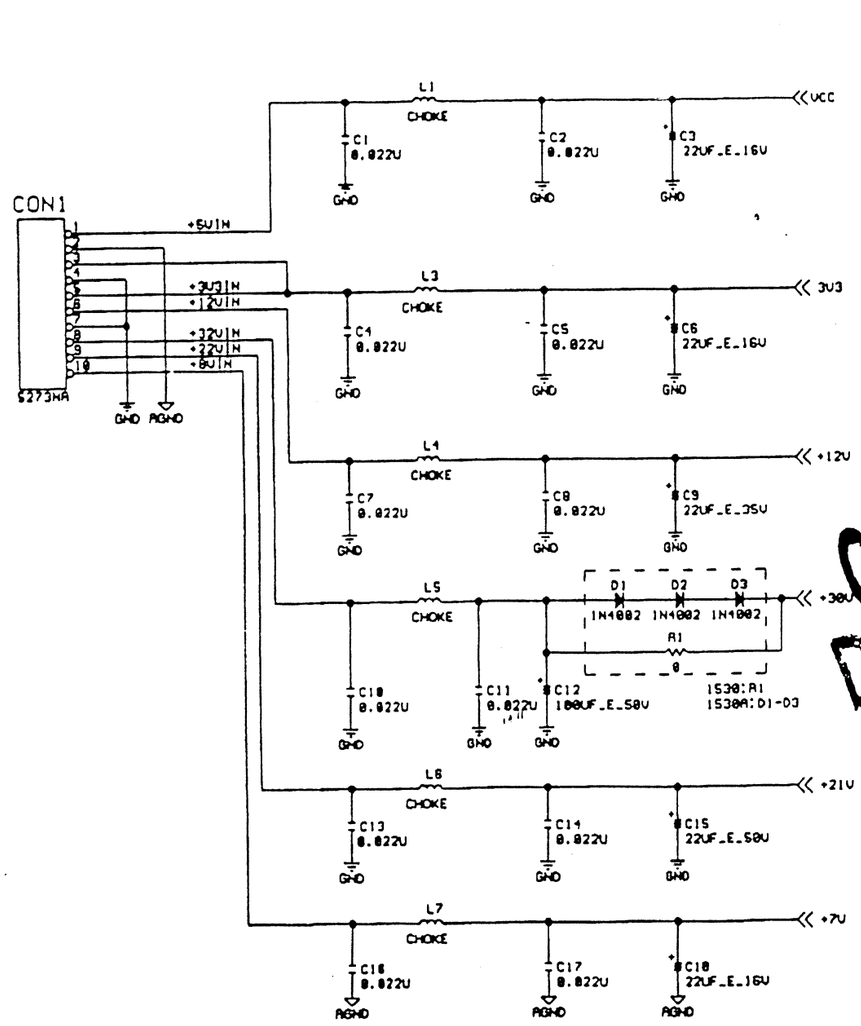

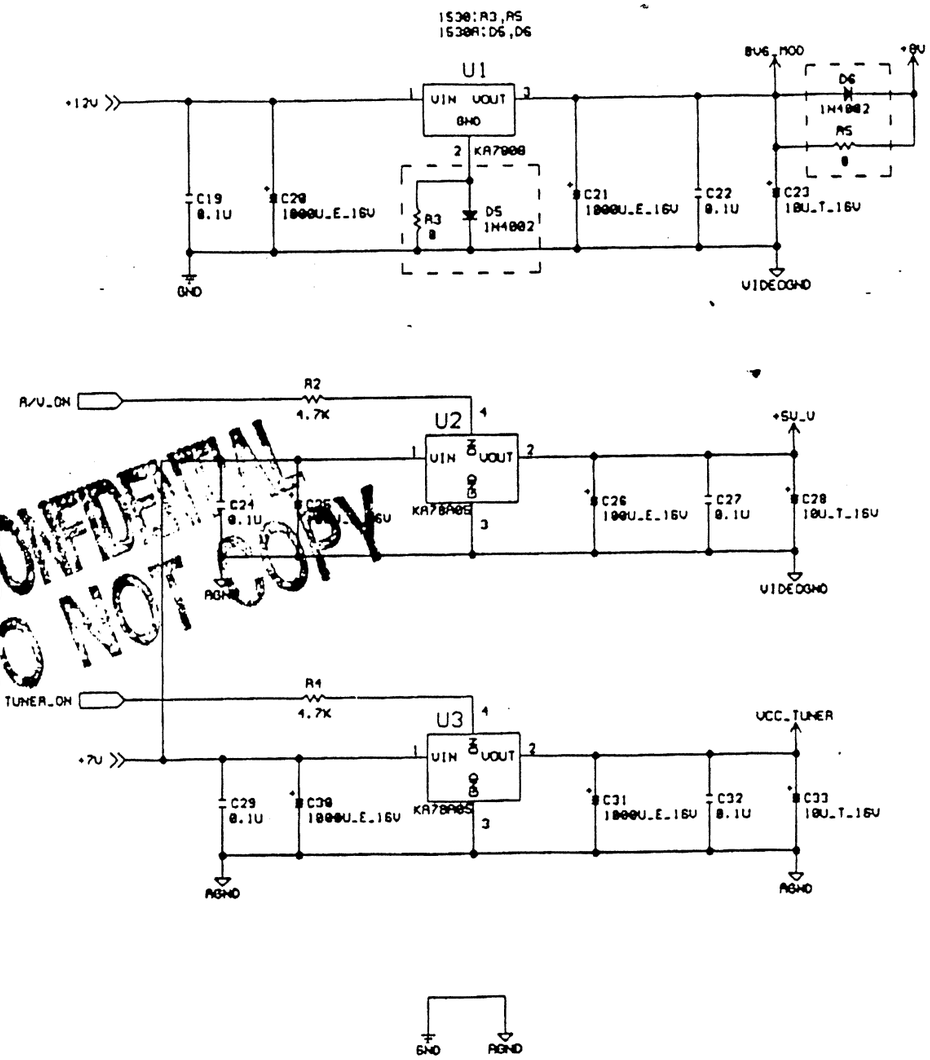

CONFIDENTIAL
DO NOT COPY

Doc. Name	1500A-FRONT	Circuit Diagram	Doc. Number	Sheet 01 of 01

ZEHN -00028

DRWN

DATE 1999-03-04

CHKD

APRO

REF

MAN

ISSUE 1.3

CONTENT

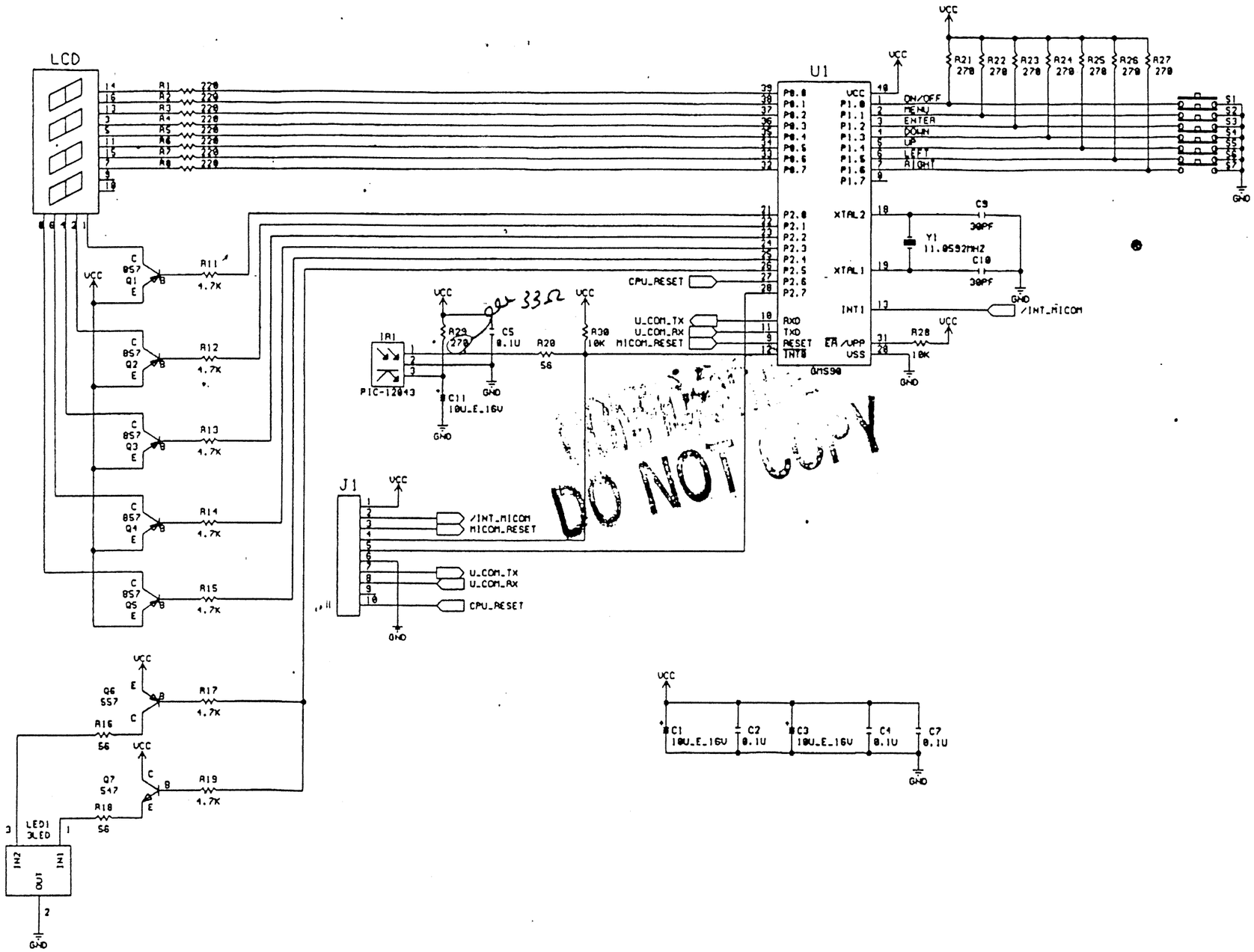

DO NOT COPY

DX400C

Doc. Name	ADT-1530/1530D/1530A/1530DA Circuit Diagram	Doc. Number		Sheet 03 of 13

DRWN

DATE 1999-03-29

CHKD

APRO

REF

MAN

ISSUE 1.4

CONTENT

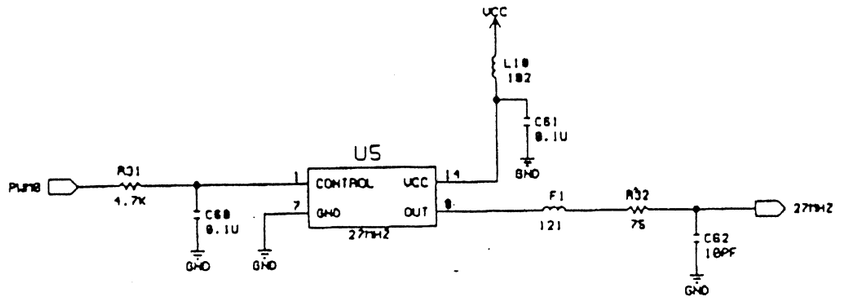

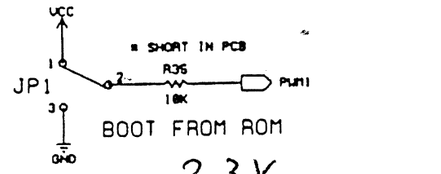

3.3V

+5V / 20Ω

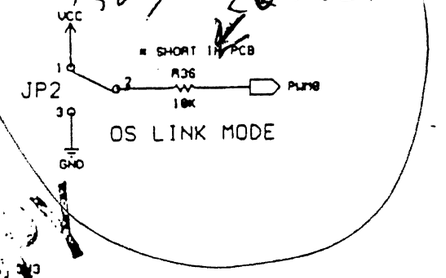

CONFIDENTIAL
DO NOT COPY

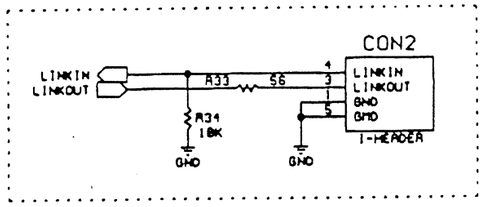

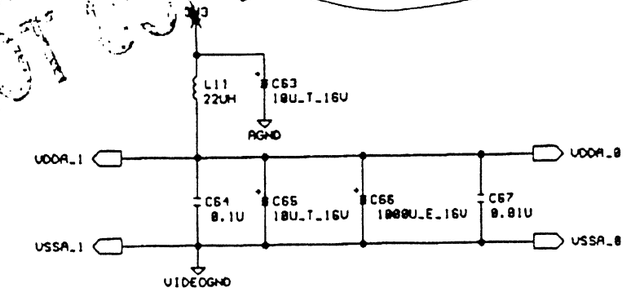

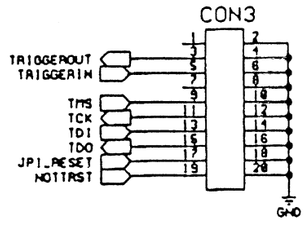

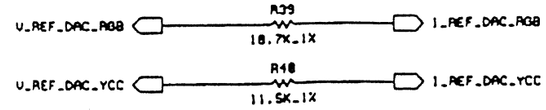

Doc. Name	ADT-1530/1530D/15 :A/1530DA Circuit Diagram	Dc Number		Sheet 02 of 13

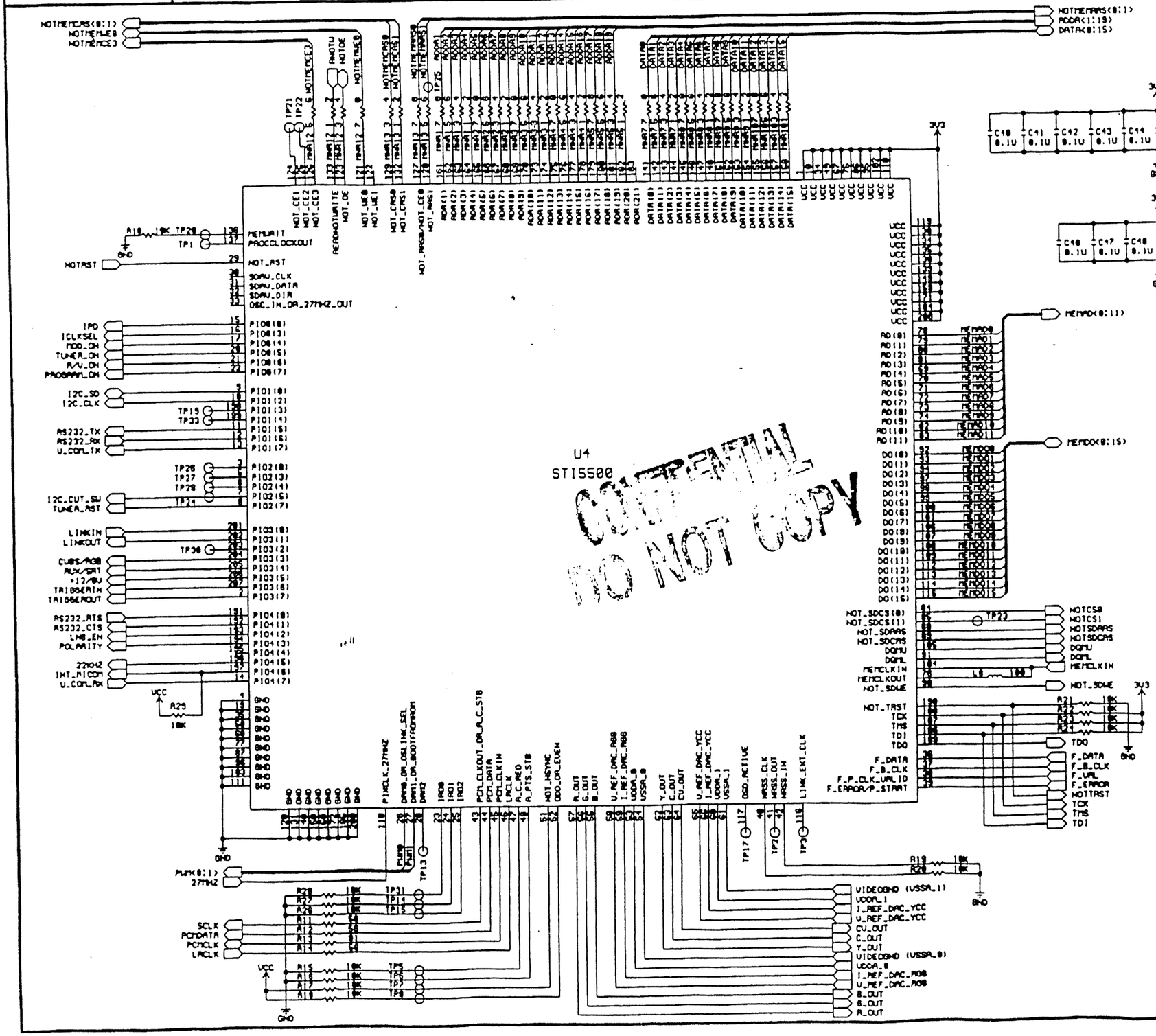

DRWN	
DATE	1999-03-29
CHKD	
APRO	
REF	
MAN	
ISSUE	1.4
CONTENT	

Doc. Name	ADT-1530/1530D/1[illegible] 0A/1530DA Circuit Diagram	D[illegible]. Number		Sheet 05 of 13

DAWN

DATE 1999-03-29

CHKD

APRD

REF

MAN

ISSUE 1.4

CONTENT

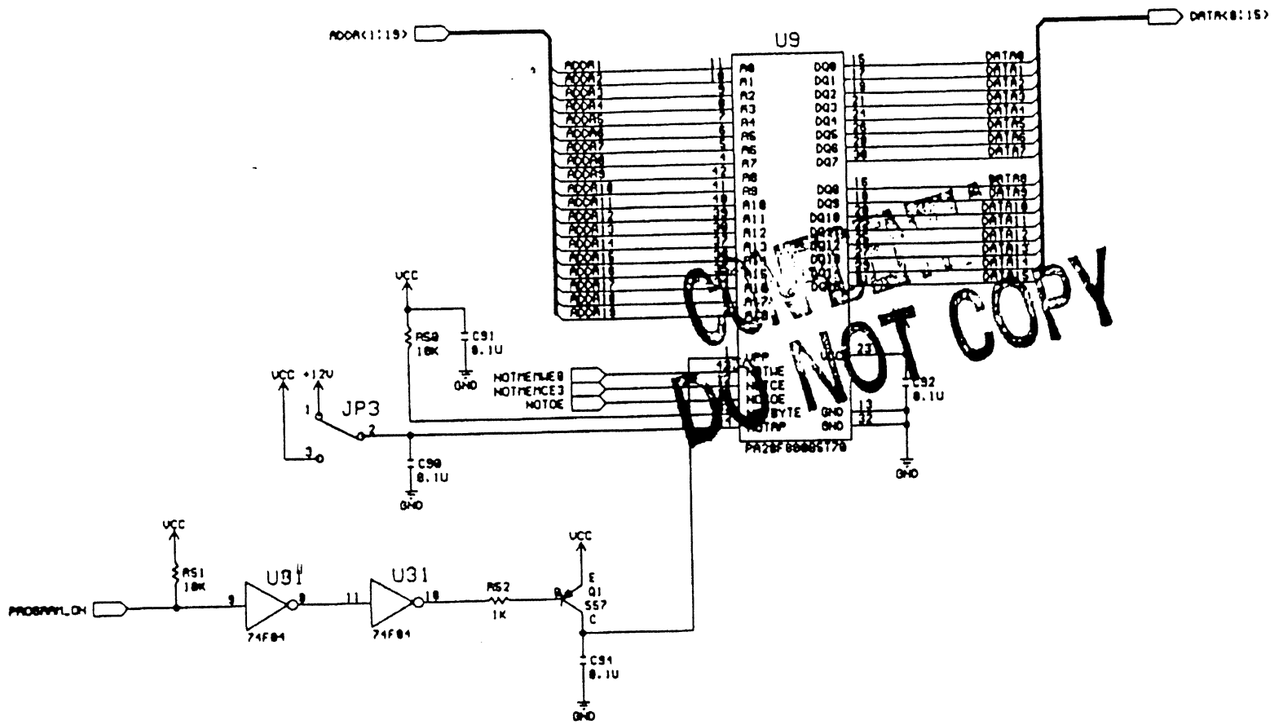

DO NOT COPY

Doc. Name	ADT-1530/1530D/153[illegible]7/1530DA Circuit Diagram	c. Number		Sheet 04 of 13

DRWN

DATE 1999-03-29

CHKD

APRO

REF

MAN

ISSUE 1.4

CONTENT

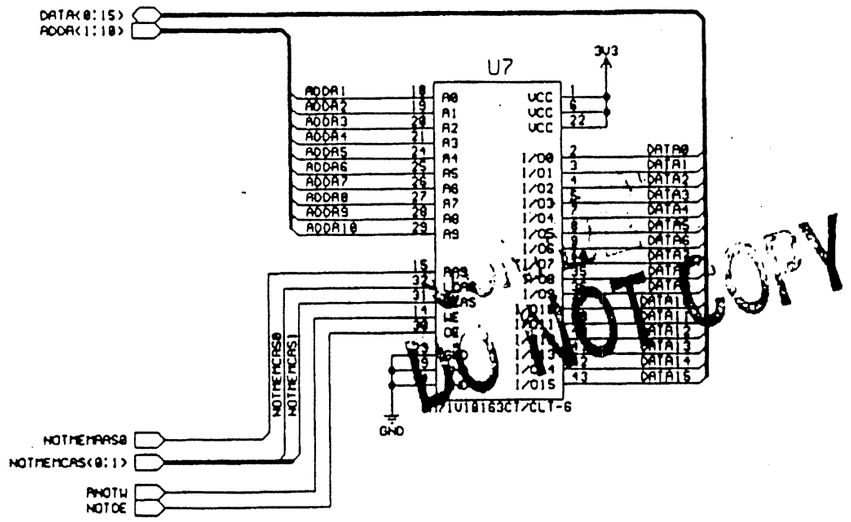

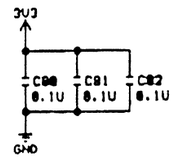

DO NOT COPY

Doc. Name	ADT-1530/1530D/1530H/1530DA Circuit Diagram	Doc. Number		Sheet 07 of 13

DRWN

DATE 1999-03-29

CHKD

APRO

REF

MAN

ISSUE 1.4

CONTENT

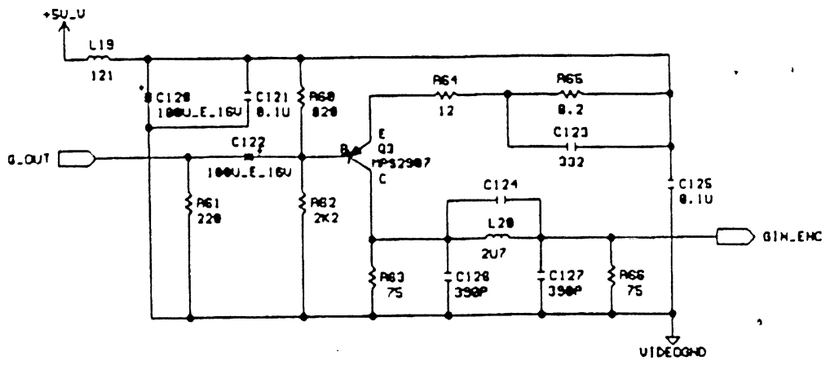

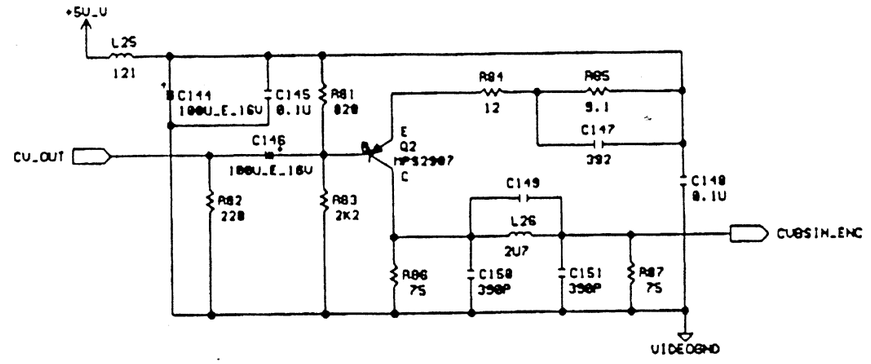

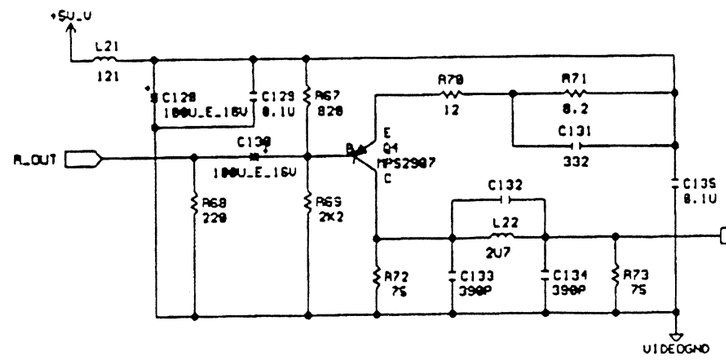

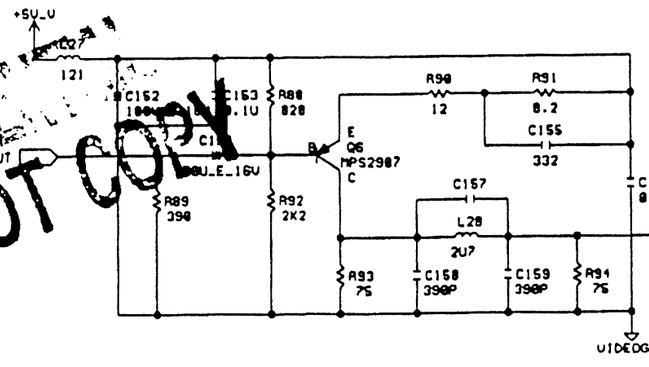

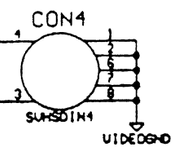

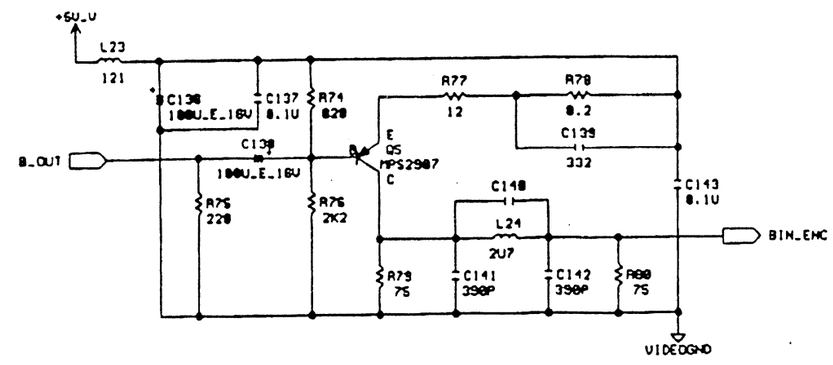

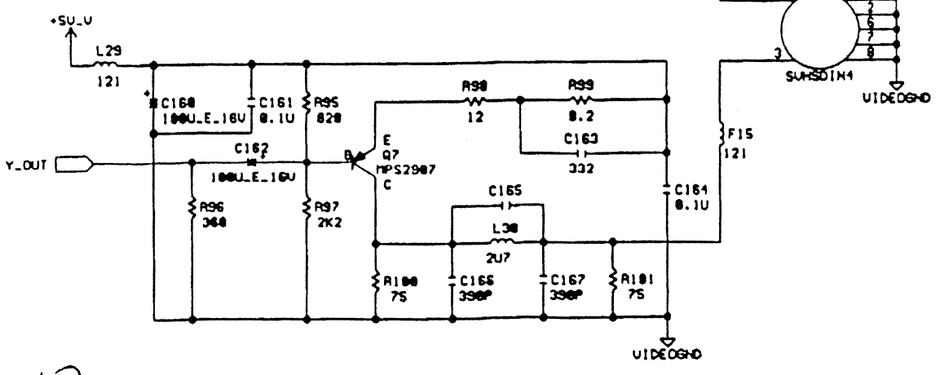

CONFIDENTIAL
DO NOT COPY

169.

Doc. Name	ADT-1530/1530D/1530A/1530DA Circuit Diagram	Doc. Number		Sheet 06 of 13

DRWN

DATE 1999-03-29

CHKD

APRD

REF

MAN

ISSUE 1.4

CONTENT

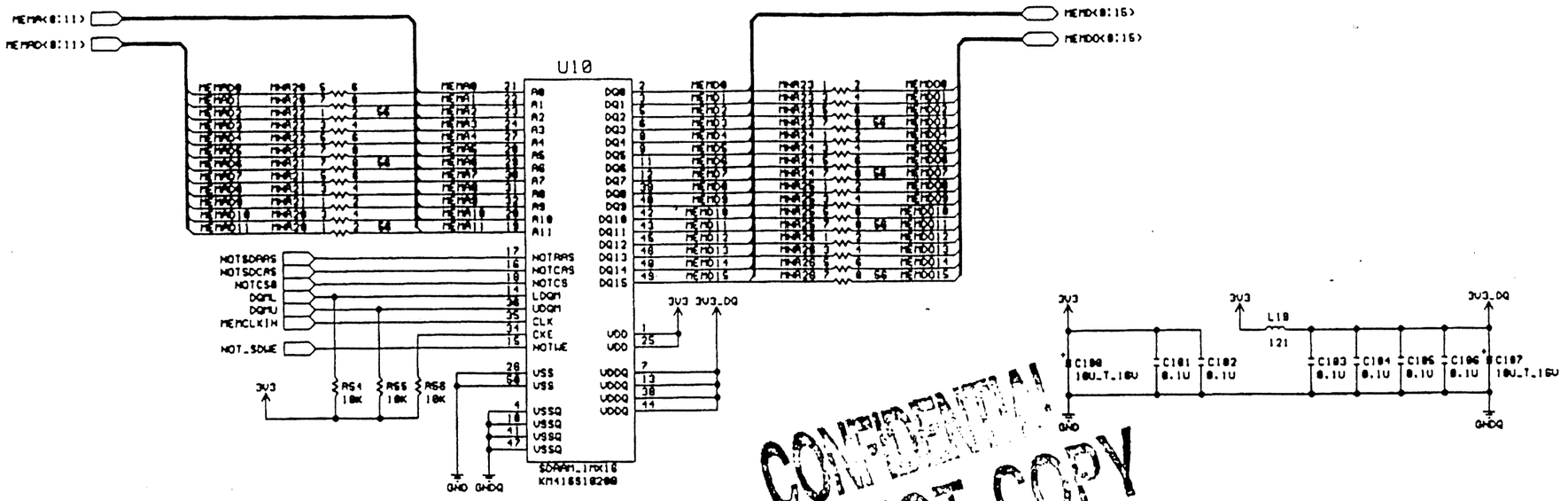

CONFIDENTIAL
DO NOT COPY

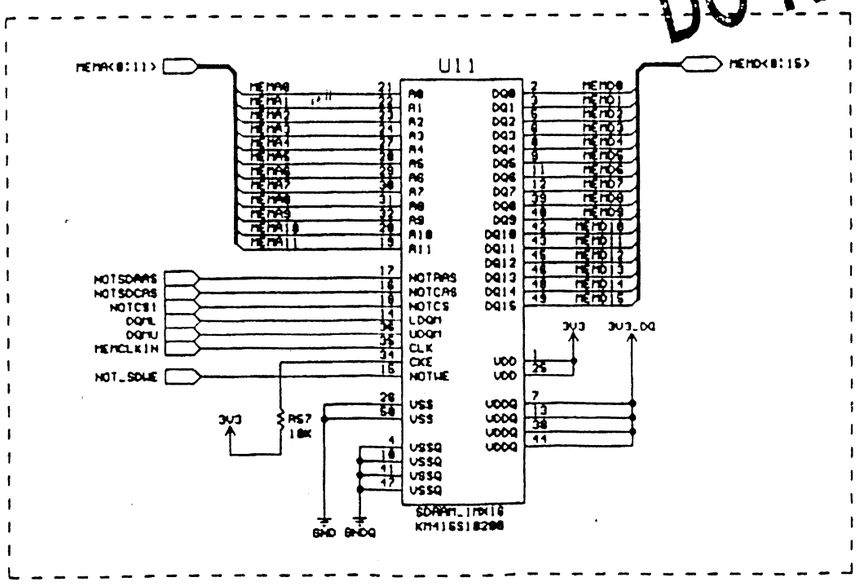

Doc. Name	ADT-1530/1530D/153ØA/1530DA Circuit Diagram	Doc. Number		Sheet 09 of 13

DRWN

DATE 1999-03-29

CHKD

APRO

REF

MAN

ISSUE 1.4

CONTENT

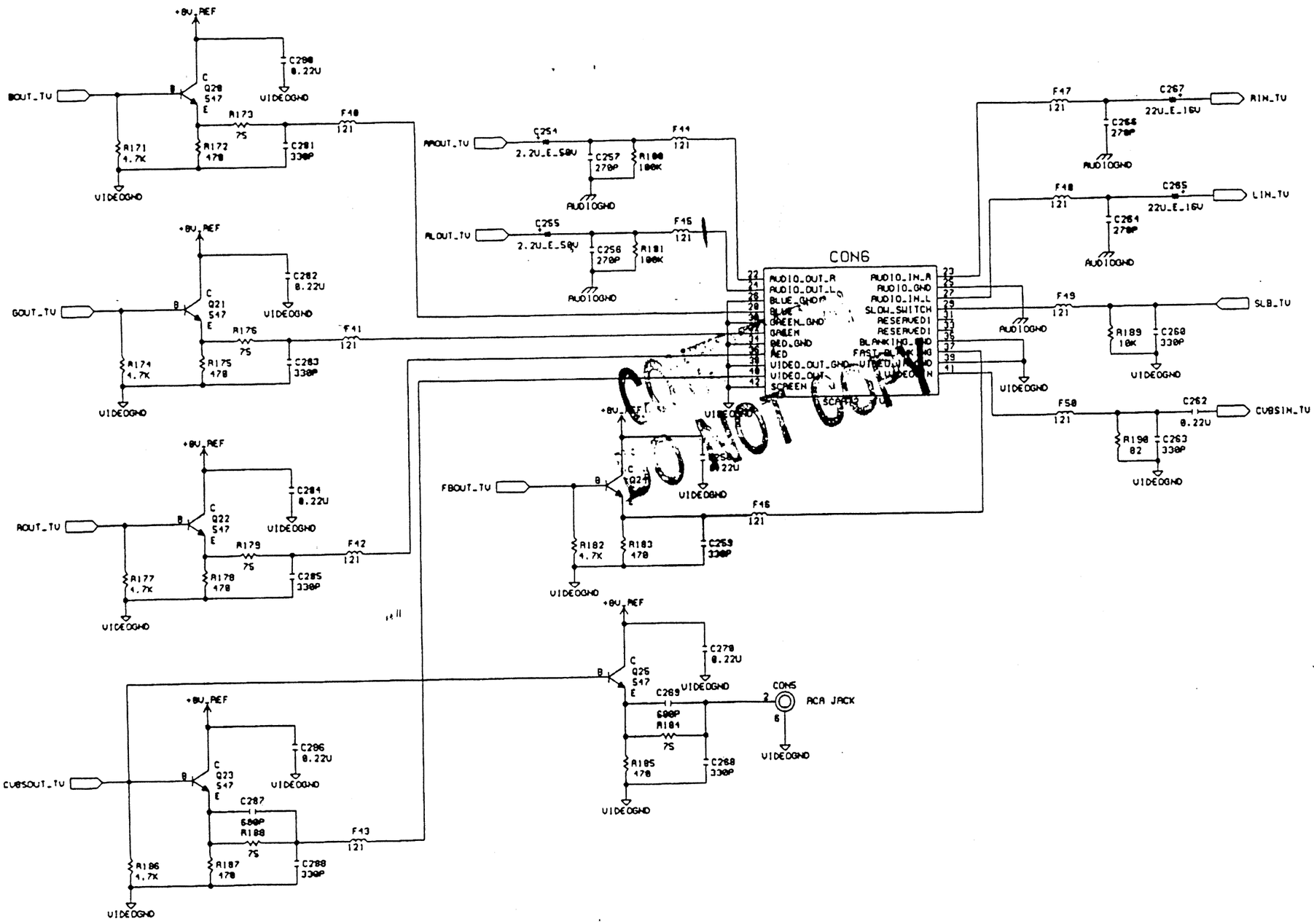

Doc. Name	ADT-1530/1530D/1530A/1530DA Circuit Diagram	Doc. Number		Sheet 08 of 13

DRWN

DATE 1999-03-29

CHKD

APRO

REF

MAN

ISSUE 1.4

CONTENT

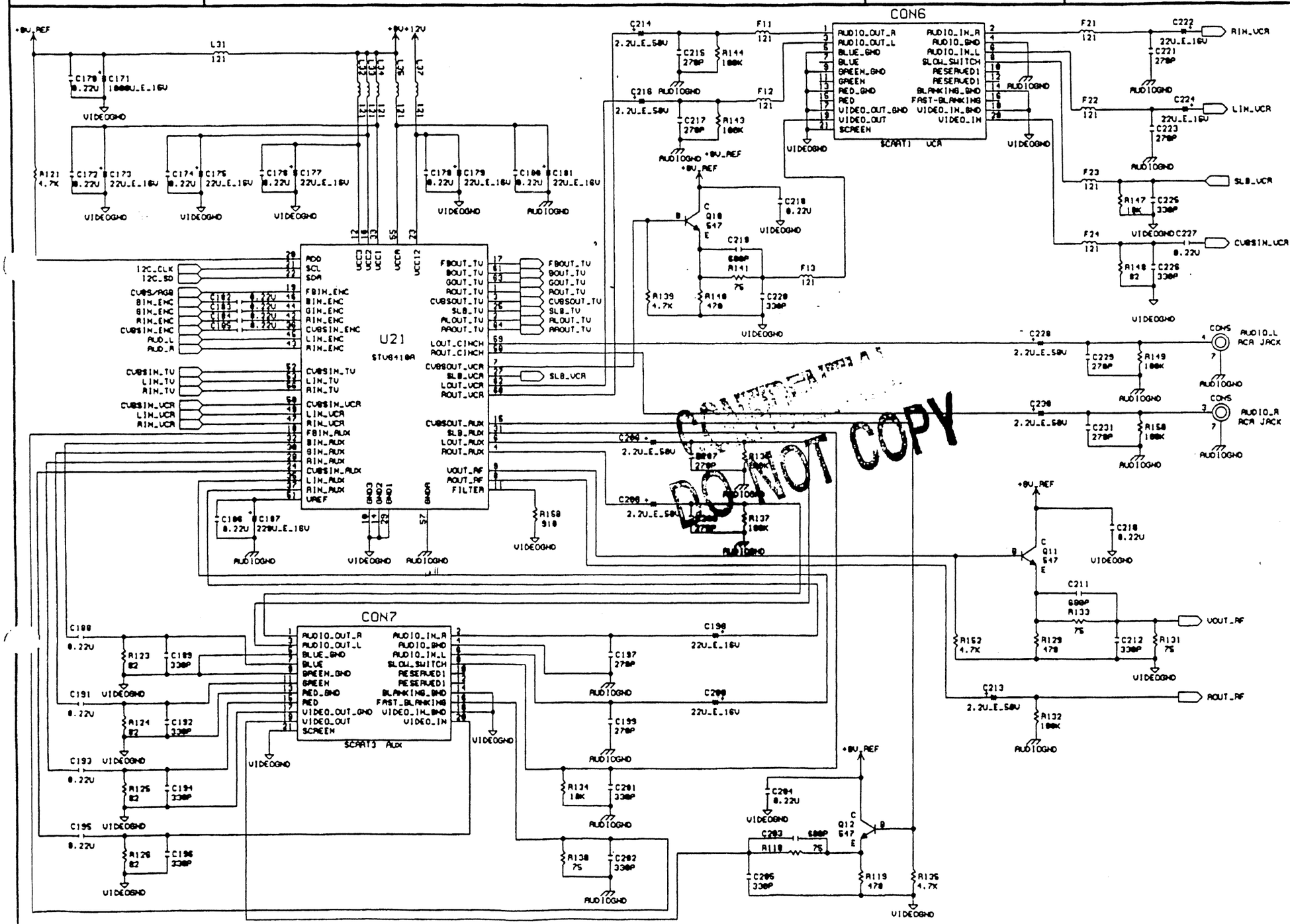

Doc. Name	ADT-1530/1530D/1530A/1530DA Circuit Diagram	Doc. Number		Sheet 11 of 13

DRWN

DATE 1999-03-29

CHKD

APRD

REF

MAN

ISSUE 1.4

CONTENT

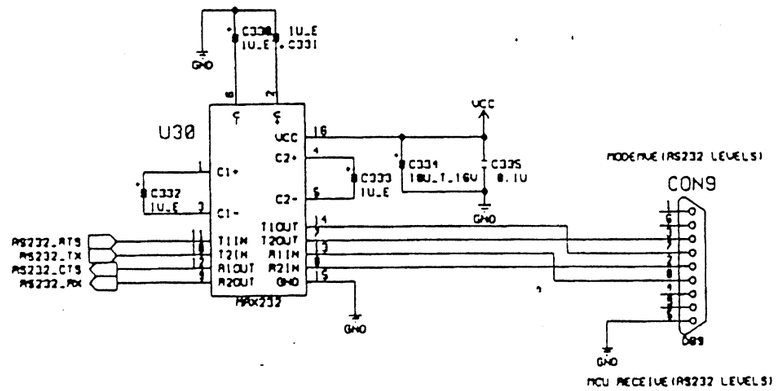

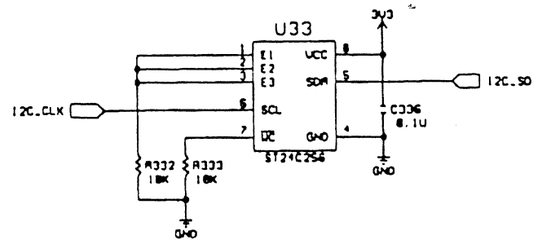

DO NOT COPY

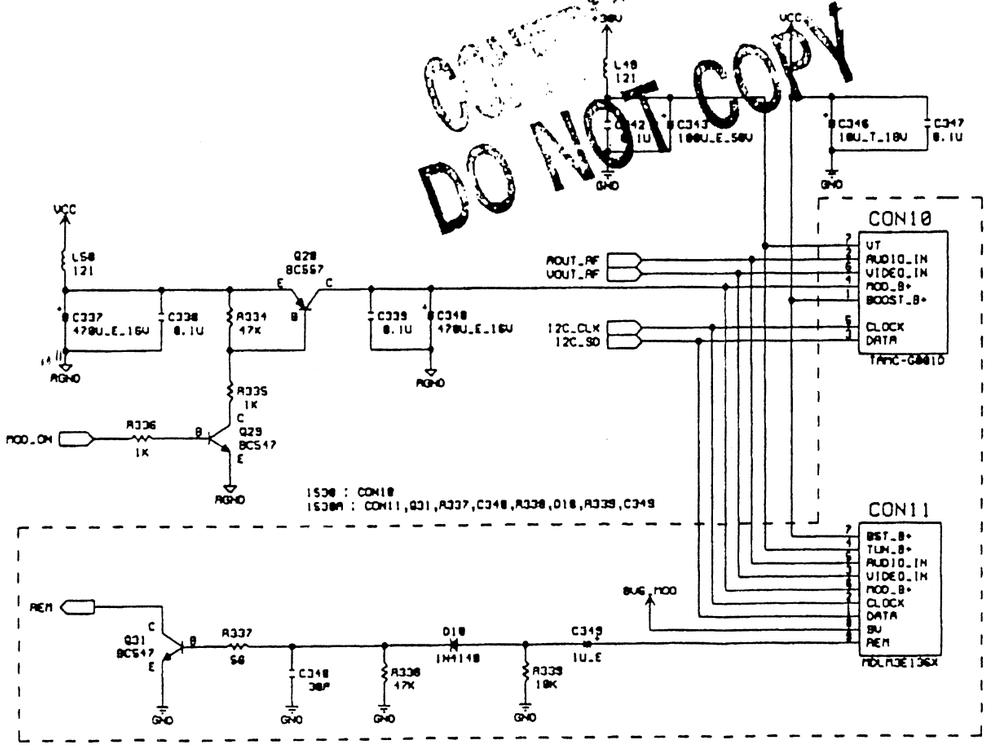

Doc. Name	ADT-1530/1530D/153 A/1530DA Circuit Diagram	Doc. Number		Sheet 10 of 15

DRWN

DATE 1999-03-19

CHKD

APRO

REF

MAN

ISSUE 1.4

CONTENT

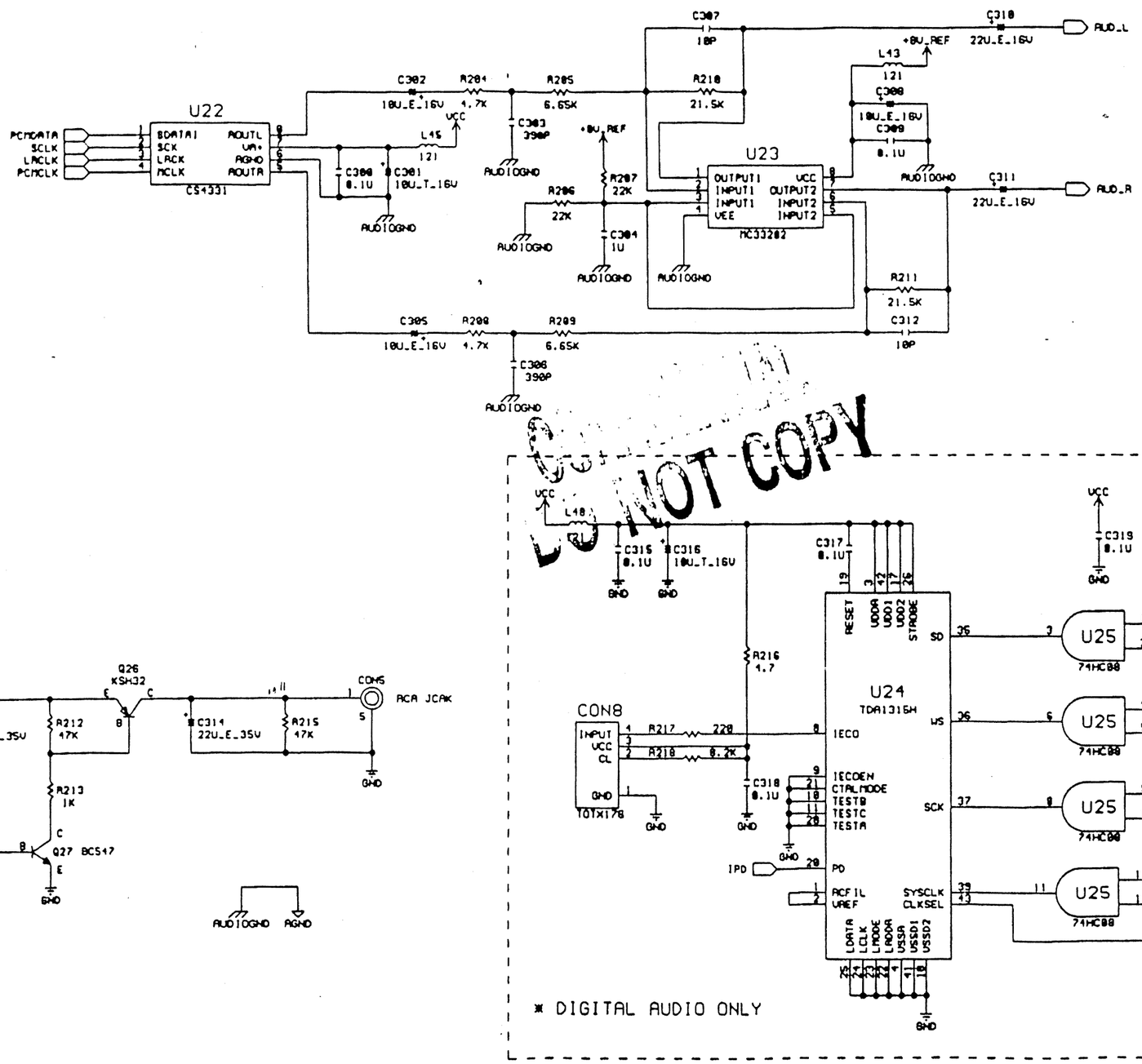

Doc. Name	ADT-1530/1530D/153[illegible]/1530DA Circuit Diagram	Doc. Number		Sheet 13 of 13

DRWN

DATE 1999-03-29

CHKD

APRD

REF

MAN

ISSUE 1.4

CONTENT -

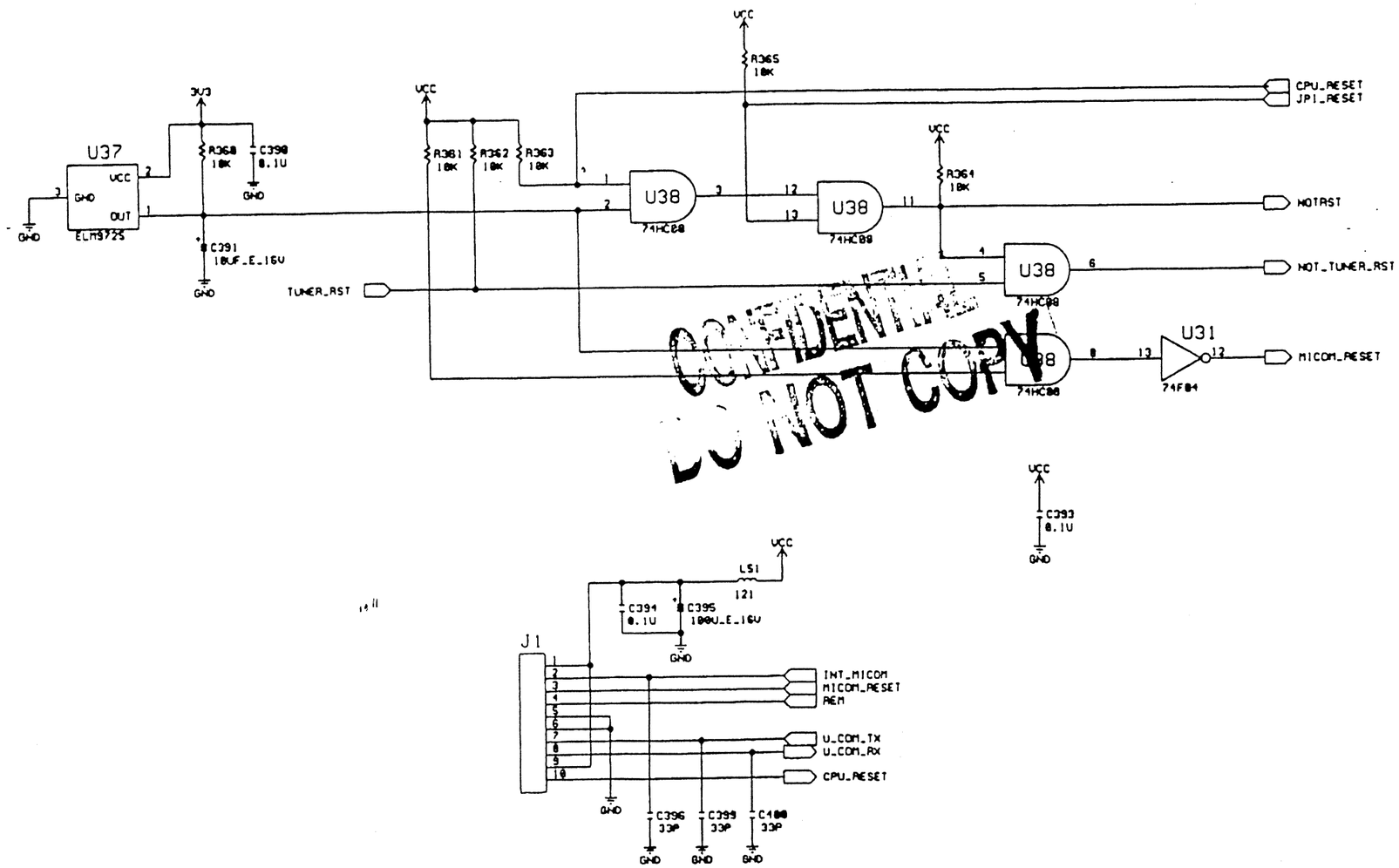

CONFIDENTIAL
DO NOT COPY

Doc. Name	ADT-1530/1530D/153 A/1530DA Circuit Diagram	Doc. Number	

Sheet 12 of 13

DRWN

DATE 1999-03-29

CHKD

APRD

REF

MAN

ISSUE 1.4

CONTENT

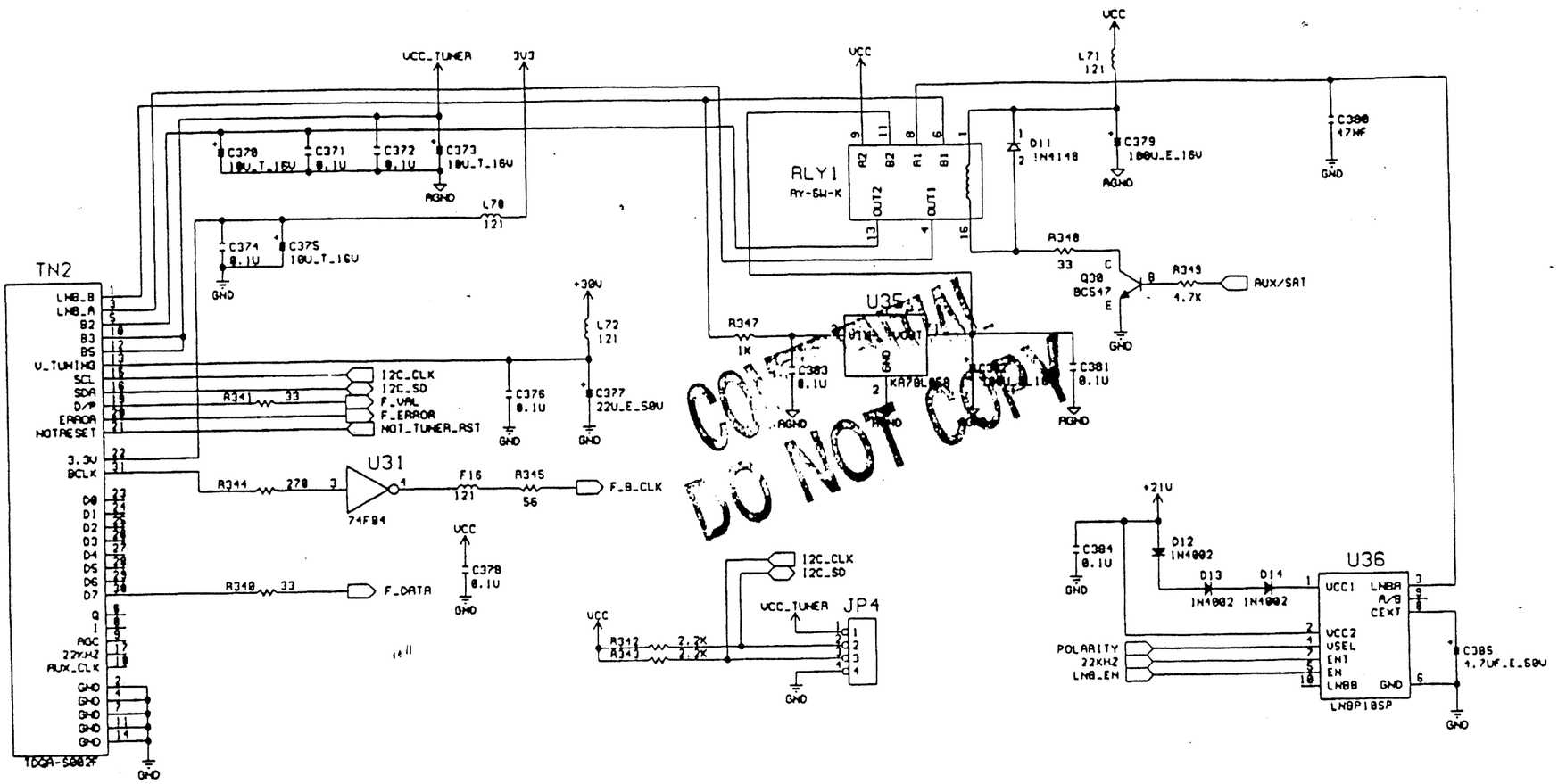

COPY
DO NOT COPY

Tuner Pin 19

1 240us 1 = 2400 B/S Symbol rate